S20

Vitra S20 Inset Washbasin 500 x 450 x 170H 1TH

VitrA

Code: VIT5464B 003 0001

Product Properties:

Ceramic material
White
Middle taphole
Overflow hole
5 year warranty

Vitraclean: Yes

Basin type: Inset

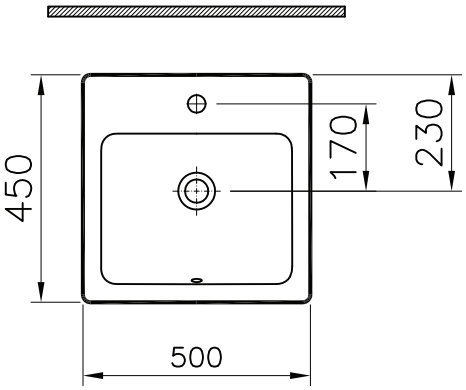

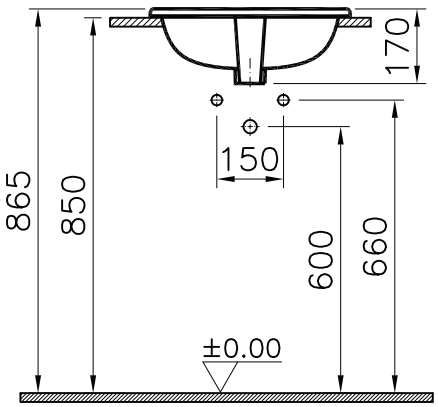

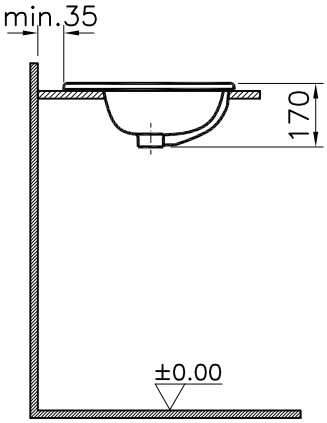

SIZE (L) x (W) x (H)

VIT5464B 003 0001 - 500 x 450 X 170 (mm)

FRANKLIN
DELIVERING INNOVATIVE SOLUTIONS SINCE 1954