# BasicJet

*Hansa Basic Jet Hand Shower 1 Function*

HANSA

Code: HE4461 0300

FINISH

Chrome
Bathroom & Shower
Intense
THERMO COOL - Improved safety

TECHNICAL PROPERTIES

Flow-rate at 300 kPa: **0.3l/s**
Hot water supply: **max. +65°C**
Working pressure: **500 - 500 kPa**
Connection size: **G1/2**
DVGW: **DW-6517CT0297**

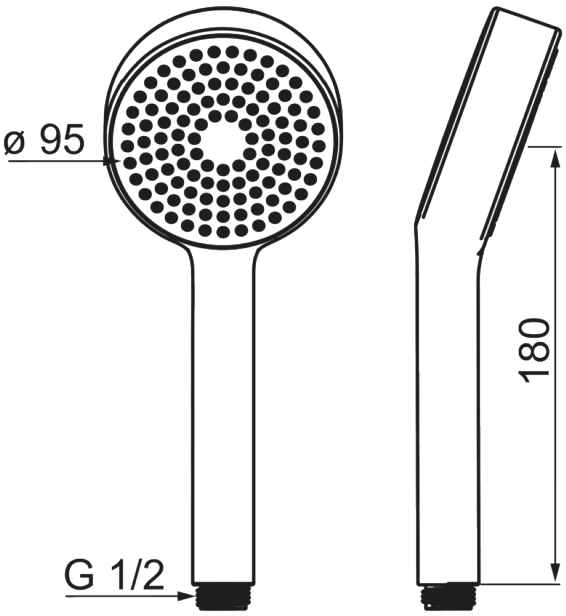


FRANKLIN
DELIVERING INNOVATIVE SOLUTIONS SINCE 1954