Modern Art

Geesa Modern Art Covered Toilet Roll Holder

Code:
GMA3508-02

- Chrome
- Material: metal
- Concealed fixing
- Covered toilet roll holder

(L x W x H)	140 x 112 x 74 mm
Weight	0.474 kg

DESIGNED AND MANUFACTURED IN THE NETHERLANDS

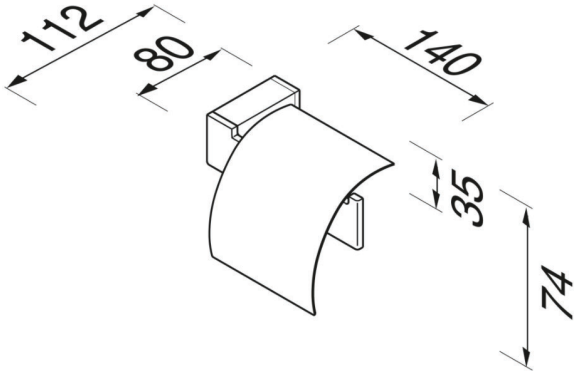

WARRANTY FIFTEENYEAR WARRANTY

FRANKLIN
INNOVATIVE PLUMBING SOLUTIONS

geesa