Nemox Chrome

Geesa Nemox Chrome Single Towel Rail 600mm

Code:
GN6507-02-60

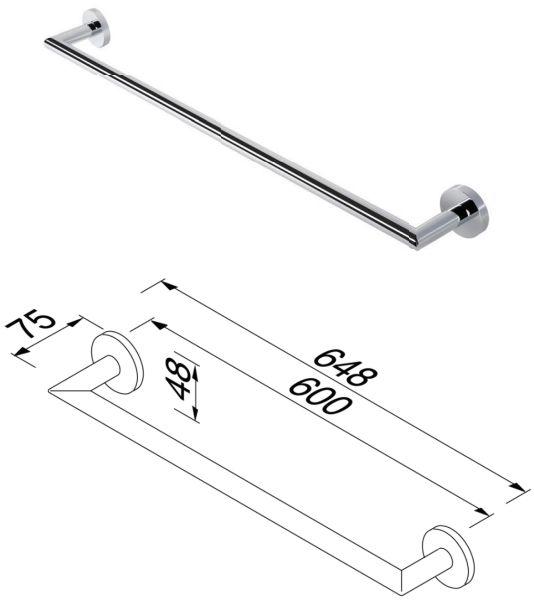

- Chrome
- Material: metal
- Concealed fixing
- 600mm single towel rail

(L x W x H)	648 x 75 x 48 mm
Weight	0.544 kg

DESIGNED AND MANUFACTURED IN THE NETHERLANDS

WARRANTY FIFTEENYEAR WARRANTY

FRANKLIN
INNOVATIVE PLUMBING SOLUTIONS

geesa

Nemox Stainless Steel

Geesa Nemox Stainless Steel Single Towel Rail 600mm

Code:
GNSS6507-05-60

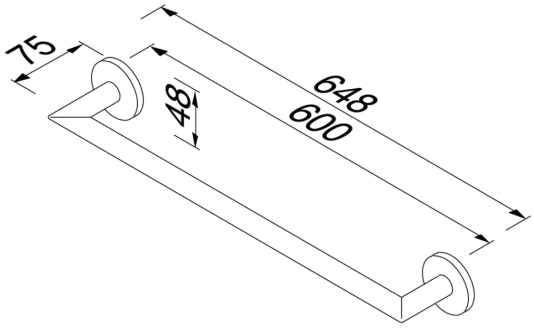

- Stainless steel
- Material: metal
- Concealed fixing
- 600mm single towel rail

(L x W x H)	648 x 75 x 48 mm
Weight	0.544 kg

DESIGNED AND MANUFACTURED IN **THE NETHERLANDS**

WARRANTY FIFTEENYEAR WARRANTY

FRANKLIN
INNOVATIVE PLUMBING SOLUTIONS

geesa

Nemox Black

Geesa Nemox Matt Black Single Towel Rail 600mm

Code:
GNB6507-06-60

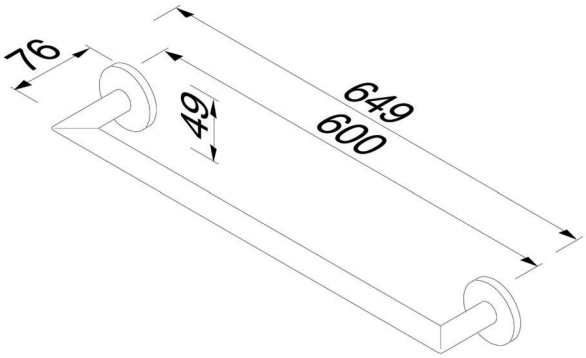

- Matt black
- Material: metal
- Concealed fixing
- 600mm single towel rail

(L x W x H)	649 x 76 x 49 mm
Weight	0.544 kg

DESIGNED AND MANUFACTURED IN THE NETHERLANDS

WARRANTY FIFTEENYEAR WARRANTY

FRANKLIN
INNOVATIVE PLUMBING SOLUTIONS

geesa

Nemox Graphite

Geesa Nemox Graphite Single Towel Rail 600mm

Code:
GN6507-09-60.Gr

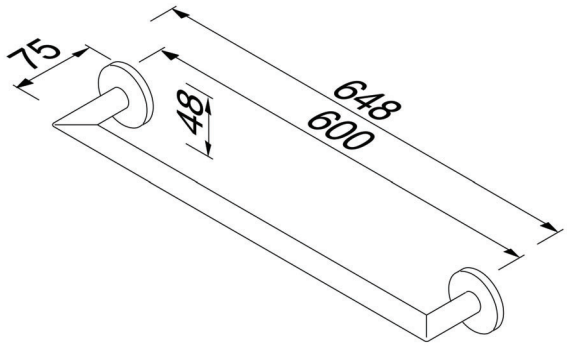

- Graphite
- Material: metal
- Concealed fixing
- 600mm single towel rail

(L x W x H)	648 x 75 x 48 mm
Weight	0.544 kg

DESIGNED AND MANUFACTURED IN THE NETHERLANDS

WARRANTY FIFTEENYEAR WARRANTY

FRANKLIN
INNOVATIVE PLUMBING SOLUTIONS

geesa